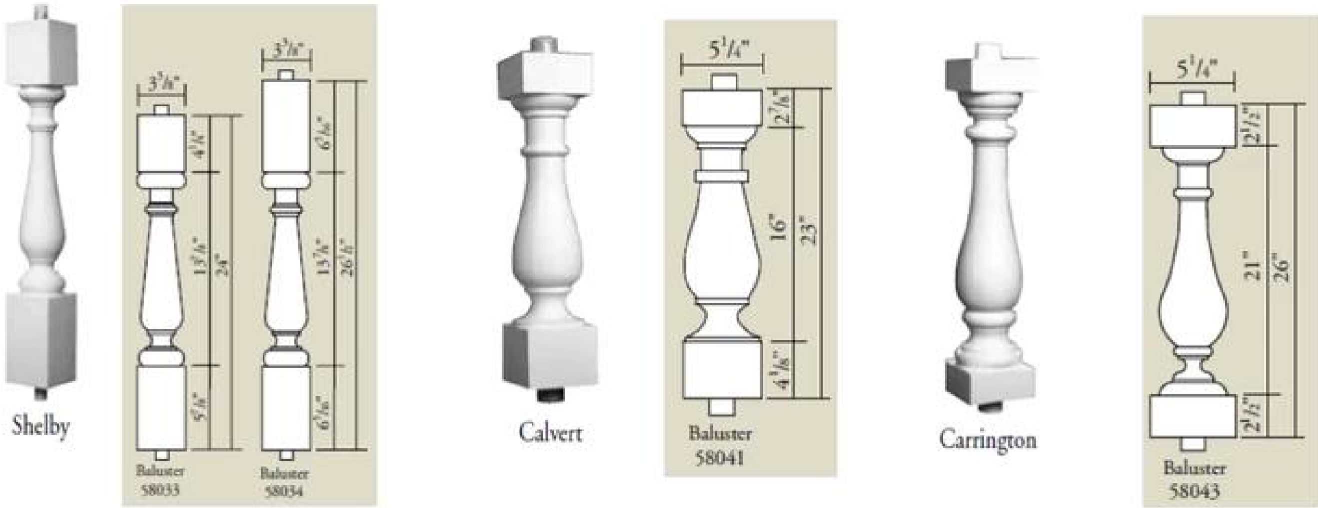

Feature：

1. □□□□□□□□□□□□
2. □□□□□□□□□□□□□□
3. □□□□□□□□□□□□□□
4. □□□□□□□□□□□□□□□□□
5. □□□□□□□□□□

Specification

□□□□PU□□ □□□□□□PU □□□□□□□□□□□□□□□□□□□□□□□□□□□□□□□□□□ □ MDF □□□□□□
□□□□□□□□□□□

1□□□□
□□□ PU □□PVC□□□□
2. □□□□□□□□□□□□□□□□□□□□□□□□□□□
3. □□□ASTM E-84□□□20□
4.□□□□□□□PU□□
5.□□□□

6[illegible]
7. [illegible]ISO 9001:2008[illegible]RoHS[illegible]REACH
[illegible]

1	[illegible]	PU [illegible] pu [illegible]
2	[illegible]	100[illegible]
3	[illegible]	[illegible]
4	[illegible]	[illegible]
5	[illegible]	PU[illegible]
6	[illegible]	[illegible]
7	[illegible]	[illegible]
8	[illegible]	[illegible]
9	[illegible]	[illegible]
10	[illegible]	[illegible]40[illegible]
11	[illegible]	[illegible]

Products applications

Products applications

Our company

Finehope□□□2002□□□□□□100□□□□□□□□□41□□□□□□32□□□□□□□□7000□□□□□□□□□□□□□□□□□□□□□□□1000□□□□□□□□□□□□□□□□

-
-

-
-

Quality control

-

- 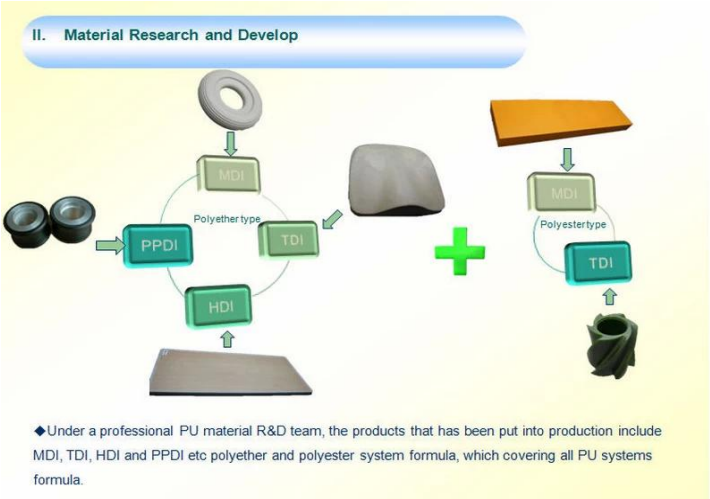

Certifications

FAQ

1□□□Finehope□□□□□□

1. 1.□□□□□□□□□□□□□□□□□□□□
2. 2□□□□□□□□□□□□□□□□□□□□
3. 3. Finehope□□
4. 4□□□□□□□□□□□
5. 5□□□□□□□□□□□□□□□
6. 6□□□□□□□PU□□□□□□□□□□□
7. 7. Finehope□□□□□□□□□□□□□□□□□□□□□□□□□□□□□□

2□Finehope□□□□□□□□□□□

1. 1.□□□□□□□□□□□□□□□□APQP□□
2. 2□Finehope□□□□□□□□□□□□□□□□□□
3. 3□□□□□□□□□□□□□□□□□□
4. 4□□□□□□□□□□□□□□□□□□□□□□□□□□
5. 5.□□□□□□□□□□□□□□□□□□□□□□□□

3. Finehope[illegible]

1. 1[illegible]
2. 2. [illegible]
3. 3[illegible]
4. 4.[illegible]

4. [illegible]Finehop[illegible]

1. Finehope[illegible]PU[illegible]PU[illegible]CAT[illegible]FIAT[illegible]TVH[illegible]GGP[illegible]12[illegible]

Contact Us

Contact with me now

Eylan :sales16@finehope.com