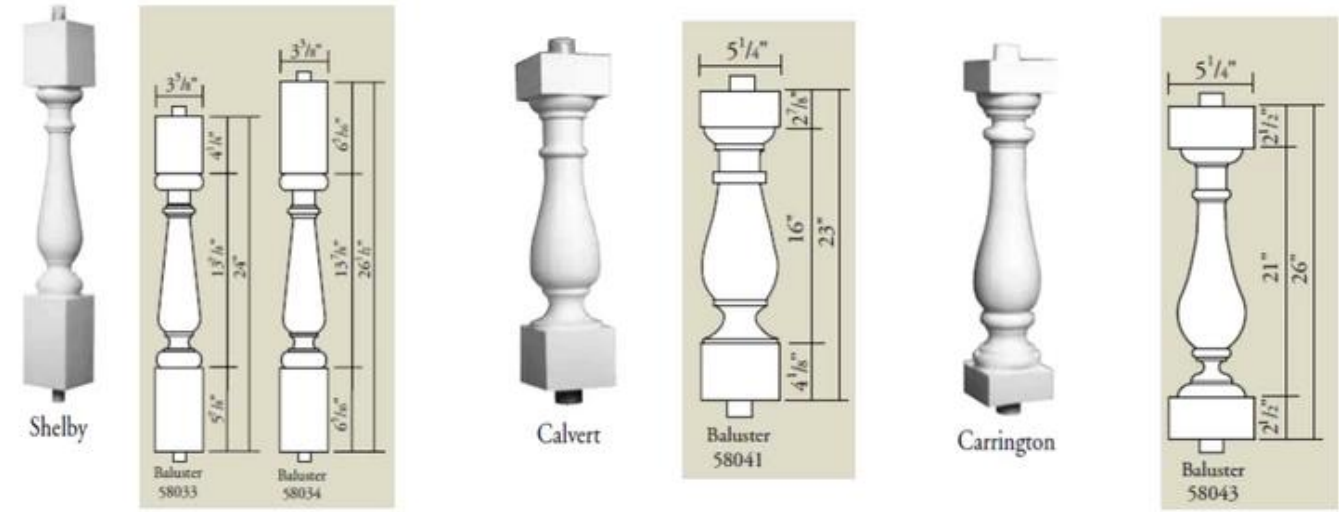

Feature:

1. Waterproof, anti-bacteria, non-slip,fireproof
2. Light weight, green product, easy installation
3. Durable, eco-friendly,sturdy surface,heat insulation
4. Anticorrosion, damp-proof, anti-crack, mothproof, anti-ultraviolet
5. No radiation, non-toxic and eco-friendly

Specification

Polyurethane(PU) materials has been widely used for interior decoration and the public decoration. Such as Houses, villas, hotels, night clubs, dancing halls, bars, clothing shops, building offices, conference halls, church etc. Different from wood or plaster, PU molding do not saturate, leak, deform or detach, it’s durable and easy to clean and maintain. And it can last longer than MDF or wood mouldings.
high density polyurethane balusters and railings

1. Low cost

Our PU balusters are produced in our own factory by our production lines. anti-UV coating and field-ready premier coat are applied.It is made of polyurethane material and steel pipe or PVC pipe;
2. Cost effective, load bearing, weather and insect proof, and require very little maintenance.
3. Fire-proof (ASTM E-84, rating of 20)
4. Acid &alkali &wind resistance railling PU baluster
5. Environment-friendly baluster
6. Easy to install, light weight balustrade
7. Certification: ISO 9001:2008,RoHS, REACH
It is widely used for interior decoration and the public decoration. Such as Houses, villas, hotels, night clubs, dancing halls, bars, clothing shops, building offices, conference halls, church etc

1	material	PU wholesale baluster,eco friendly balustrade,custom pu material,baluster
2	MOQ	100pcs
3	size	as your requirement
4	technical	hand-made and machinery
5	finished	PU self-skin
6	payment term	T/T
7	packing	Normal export corrugated carton as per clients' request
8	usage	polyurethane baluster,balustrade for deck and house ect
9	Custom service	Dimension, material, style all can be custom made
10	delivery time	40 days after receiving the deposit
11	remarks	Your satisfaction is our greatest affirmation and if you have any problems please contact us.

Products applications

Products applications

Our company

Finehope was founded in 2002 and the number of workers is more than 100, and the number of management group is 41 with the average age of 32.The company has a modern factory with an area of 7000 square meters, and it also has an office building with an area of 1000 square meters which combines modern and classical styles.

- 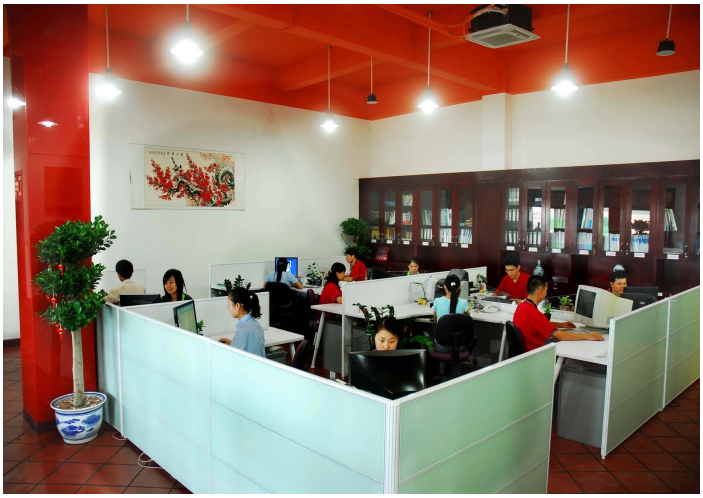
-
-
-

Quality control

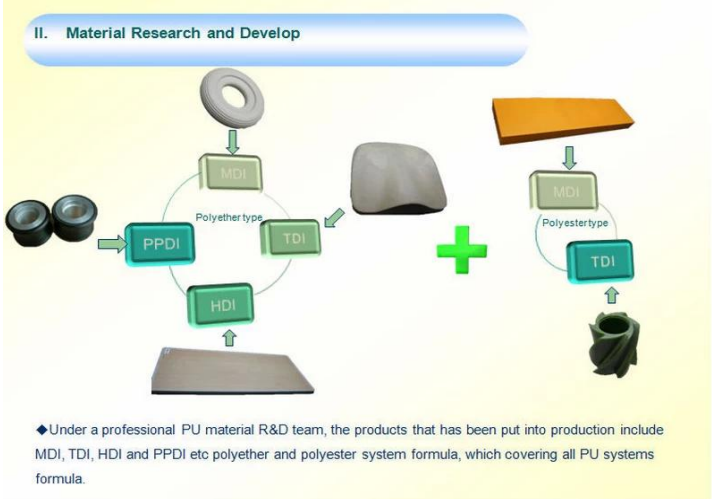

- ◆Under a professional PU material R&D team, the products that has been put into production include MDI, TDI, HDI and PPDI etc polyether and polyester system formula, which covering all PU systems formula.

Certifications

FAQ

1. What are the advantages of choosing Finehope?

1. 1. Product quality assurance, delivery guarantee, good after-sales service
2. 2. Cost-effective, fast development efficiency, professional operation with integrity
3. 3. Finehope will conduct all testing analysis and then work out testing standards to reduce quality standard dispute between customers and manufacturers.
4. 4. Lean production management mode.
5. 5. Help customers develop and design new products.
6. 6. Has rich experience in the design and processing of pu products.
7. 7. Finehope is a high-tech enterprise in China with domestic and international invention patents technology and intellectual property.

2. What are the differences between Finehope and domestic peers?

1. 1. Quality assurance: advanced product quality planning(APQP).
2. 2. Finehope has rich experience in serving international large enterprises.
3. 3. Has professional scientific research team of polyurethane material.
4. 4. Has independent design, manufacturing and innovation ability of production equipment and molds.
5. 5. Has engineer team who is responsible for the quality assurance system and quality control.

3. What are the differences between Finehope and European and U.S peers?

1. 1. Has sound and mature supporting supply chain
2. 2. Lower mold costs
3. 3. High efficiency of development and design ability and short process time.
4. 4. Cost effective and good service attitude.

4. Why you choose Finehope?

1. Finehope is the most professional pu manufacturer in China, which has a professional R & D team, advanced PU production equipment, professional testing equipment and perfect quality management system. We have 12-year cooperation experience with CAT, FIAT, TVH, GGP and other famous enterprises. We provide them with one-stop service from R & D to production to satisfy their customization needs.